ARES154B

COMBI FOR PASTRY SHOPS AND BAKERIES - 15 X EN1 (600 X 400) - ELECTRIC WITH DIRECT STEAM ● MANUAL ELECTRONIC CONTROLS - ASSISTED COOKING - EQUIPPED WITH N. 1 TROLLEY NKS154







3.5-inch (LCD - TFT) colour display for displaying your favourite programs, pre-set programs, variable fan speed, automatic washing, menus, and settings.

Features

SMALL
Up to 15% less space by miniaturising the components (depending on model).

ACCURATE
Stable and accurate temperature at all times thanks to the automatic consumption management. Autoclima controls the ideal climate, thus guaranteeing excellent cooking quality at all times.

EFFICIENT
Energy monitor. VCS Vapor Cleaning System, new washing system. Reduction in detergent consumption up to 30% less.

POWERFUL
Up to 20% more powerful. Pre-heating up to 320°C. Thanks to the new energy supply systems, Naboo 5.0 results in savings of up to 16% less compared to previous models.

QUICK
Broccoli in just 7 minutes. 24 chickens in 30 minutes (Ref. mod.101)

STURDY
Long Life Component LLC. New long-lasting components. EMA Easy Maintenance Access to reduce service intervention times.

CE EMC CB IPX5 EAC UK CA

Capacity

Capacity		15 x EN1 (600 x 400)		
Distance between layers	*mm*	89	*inch*	3.5
Meals - Croissants	*n.*	180 / 270		
Max. total load	*kg*	90	*lbs*	198.5
Max. tray load	*kg*	15	*lbs*	33.1

Dimensions

Width	*mm*	892	*inch*	35.1
Depth	*mm*	862	*inch*	33.9
Height	*mm*	1812	*inch*	71.3
Maximum outer width	*mm*	892	*inch*	35.1
Max exterior depth	*mm*	966	*inch*	38.0
Maximum exterior height	*mm*	1856	*inch*	73.1
Packaging width	*mm*	1100	*inch*	43.3
Packing depth	*mm*	1110	*inch*	43.7
Packaging height	*mm*	2040	*inch*	80.3
Net weight	*kg*	273	*lbs*	602.0
Gross weight	*kg*	316	*lbs*	696.8
Volume	*m3*	1.39	*ft3*	49.1
Packing volume	*m3*	2.49	*ft3*	87.9
Minimum installation distance - left side	*mm*	50	*inch*	2.0
Minimum installation distance - rear side	*mm*	50	*inch*	2.0
Minimum installation distance - right side	*mm*	500	*inch*	19.7
Cooking compartment width	*mm*	459	*inch*	18.1
Cooking compartment depth	*mm*	650	*inch*	25.6
Cooking chamber height	*mm*	1501	*inch*	59.1

Power supply

Power supply voltage		3N-AC 400 V
Electrical absorption	*A*	58
Frequency	*Hz*	50/60
Total electric power	*kW*	37,2
Differential switch		RCD cl. B

Water Connection

Cold water inlet	*ø*	3/4"		
Softened water inlet	*ø*	3/4"		
Min. pressure	*bar*	2		
Max. pressure	*bar*	5		
Minimum water flow	*Lt*	10		
Drainage slope		4°		
Discharge - ø	*mm*	50	*inch*	2.0

Water quality

Water hardness for steam generation connection	*°dh / ppm*	6° / 9° fH		
pH value	*Ph*	> 7,5		
Cl (chloride) - max	*mg / l*	30		
Cl2 (free chlorine)	*mg / l*	0.1		
Fe (iron)	*mg / l*	0.1		
NH2Cl (monochloramine)	*mg / l*	0,2		
Max. cold water temperature	*°C*	30	*°F*	86.00
Max. softened water temperature	*°C*	50	*°F*	122.00
Electrical conductivity	*µS*	50 - 200		

Emissions

Latent heat	*W*	6696		
Sensitive heat	*W*	4464		
Max. liquid discharge temperature	*°C*	85	*°F*	185.00
Noisiness	*db*	< 50		

Special voltages and frequencies on request

TS-NAE201B-F60	3-AC 480 V - 60 Hz
TS-NAE201B-F50	3-AC 480 V - 50 Hz
TS-NAE201B-E60	3N-AC 440 V - 60 Hz
TS-NAE201B-E50	3N-AC 440 V - 50 Hz
TS-NAE201B-D60	3-AC 440 V - 60 Hz
TS-NAE201B-D50	3-AC 440 V - 50 Hz
TS-NAE201B-C60	3-AC 400 V - 60 Hz
TS-NAE201B-C50	3-AC 400 V - 50 Hz
TS-NAE201B-B60	3-AC 230 V - 60 Hz
TS-NAE201B-B50	3-AC 230 V - 50 Hz

HOW TO USE

- Manual mode with three cooking modes and instant cooking start: convection from 30°C to 300°C, steam from 30°C to 130°C, combination convection + steam from 30°C to 300°C.
- Autoclima® - System that automatically manages the perfect climate in the cooking chamber.
- Automatic with 64 tested and stored cooking programmes, including programmes for reheating on the plate or in the pan.
- Programmable with the ability to store 99 cooking programmes in automatic sequence (up to 9 cycles), assigning a name and dedicated icon.
- Rapid selection of favourite programs using scroll & push, with the dedicated scroller.
- Fast-Dry Boosted® - Automatic system for quick dehumidification of the cooking chamber.

CONTROL MECHANISMS

- Auto reverse (automatic reverse of fan rotation) for perfect cooking uniformity.
- Automatically regulated steam condensation.
- Easy access to programmable user parameters to customise the appliance through the user menu.
- Ability to choose up to 6 fan speeds; the first 3 speeds automatically trigger a reduction in heating power. For special cooking methods, you can use an intermittent speed.
- Temperature control at the product core using probe with 4 detection points.
- USB connection to download HACCP data, update software and load/download cooking programmes.
- Possibility of setting combi switch-off at the end of the automatic wash program.
- Pre-configured SN energy optimisation system (optional).
- SERVICE program: Testing the operation of the electronic board - Display of the temperature probes - Counter for operating hours of all primary functions for programmed maintenance.
- Self-diagnosis before starting to use the equipment, with descriptive and audible signalling of any anomalies.
- EcoVapor - With the EcoVapor system, there is a net reduction in water and energy consumption due to the automatic controls of the steam saturation in the cooking chamber.
- Low consumption LED cooking chamber lighting. Optimal visibility in all points of the cooking chamber. Neutral light that doesn't alter the original colours of the product.
- Intelligent Energy System - Based on the quantity and type of product, the oven optimises and controls the energy output, maintaining the best cooking temperature and avoiding fluctuations.
- Core probe connection through a connector outside of the cooking chamber (optional).
- Multipoint core probe fixed, ø 3 mm.

STRUCTURAL CHARACTERISTICS

- Perfectly smooth, watertight chamber.
- Door with rear ventilated double tempered glass with air chamber and interior heat-reflecting glass for less heat radiation towards the operator and greater efficiency.
- Internal glass that folds to open for easy cleaning.
- Adjustable hinge for optimal seal.
- Deflector that can be opened for easy fan compartment cleaning.
- Cooking chamber in 1 mm thick 18/10 AISI 304 stainless steel with long fully rounded edges for best air flow and easier cleaning.
- New push-in adaptable dove-tail joint seal for oven front panel made with heat and age resistant silicon rubber, easy to replace.
- Front removable control panel for easy servicing.
- Two water inlets (soft and cold water).
- New oven drain with built-in air gap in accordance with standard EN61770.
- Compact brushless magnetic drive motors.
- Solid state relay for power optimisation and modulation.
- Long Life Component LLC - Use of new long-lasting components (Lainox internal approval procedure).

OPERATION

- LED HVS (High Visibility System) alphanumeric display to display the temperatures, Autoclima, time and core temperature.
- SCROLLER knob with Scroll and Push function for confirming choices.
- LED bars to signal that the temperature, timer and probe temperature are activated.
- Manual pre-heating.
- Cool Down function for the rapid fan-cooling of the cooking chamber.
- Automatic resumption of cooking in case of a power failure.
- Rapid cooling with possible injection of water into the cooking chamber.
- Manual humidifier.
- Acoustic and visual signalling during the various stages of cooking, with a flashing light at the end of the cycle.
- User interface with a choice of 29 languages.
- Possibility to view and modify the recipe at any time.
- 3.5-inch (LCD - TFT) colour display for displaying your favourite programs, pre-set programs, fan, automatic washing, menus and settings.

ELECTRICAL OPERATION

- Cooking chamber heating system with armoured heating elements in INCOLOY 800 stainless steel.

STEAM GENERATION - DIRECT

- Direct cooking chamber steam generation system with water injection directly on the fan and nebulization on the heating elements. Advantage: immediate availability of steam in the cooking chamber.

SAFETY FEATURES

- Cooking chamber temperature limiter.
- Cooking compartment safety device for pressure built-up and depression.
- Fan motor thermic protection.
- Door open/closed electronic sensor.
- Electronic control for lack of water alarm.
- Self-diagnosis with smart error viewing.
- Ventilated component cooling system with electronically controlled over-temperature display.
- Fan motor brake.
- Max 65°C external temperature on the door panel.
- Complies with national and international standards for safe operation in case of use without direct operator supervision - IEC 60335-1 / IEC 60335-2-42.
- Maximum last tray shelf height 160 cm using the model's specific support.
- In case of a power failure during washing, hygiene is always guaranteed insofar as the washing cycle is automatically resumed.

CLEANING AND MAINTENANCE

- Manual cleaning system with retractable hand-held shower.
- WMS - Wash Management System. System allowing washing programmes to be planned based on combi use.
- 7 automatic washing programmes without the need for operator input after start-up: Manual - Rinse - Fast - Soft - Medium Eco - Hard Eco - Grill.
- "Fast" ultra-fast washing in 10'. Minimum interruptions to the work cycle and consistently optimal cleaning.
- Easy external cleaning thanks to perfectly smooth surfaces in stainless steel and glass and IPX5 protection against water splashes.
- CombiClean Boosted liquid cleaner in 10 L canister (100% recyclable HDPE). Supplied with canister of CombiBlue (990 g), alkaline cleaning agent for initial oven start-up.

INSTALLATION AND ENVIRONMENT

- 100% recyclable packaging.
- LCP - Life cycle perspective: CO2 consumption - 380 Kg CO2 eq/year. The calculation was performed taking mod. _E101B (model with steam generator), taking into account a hypothetical restaurant use and considering 8 hours a day for 3.5 days a week, forty-eight day per year.
- Product recycling rate: 90%.
- Quality ISO 9001 / Safety ISO 45001 / Environmental ISO 14001 certification.
- It is recommended to have the equipment installed by LAINOX accredited Service Centers.
- Operation without adding the water softener and descaler (model with steam generator).
- It is recommended to have periodic maintenance carried out by a LAINOX Service Center in accordance with the manufacturer's recommendations and as stated in the maintenance manual and warranty.

STANDARD EQUIPMENT

- 6 speed fan
- Multipoint core probe ø 3 mm with external connector
- Built-in and retractable hand shower with tap
- Electrical cable - length 3 m. Only for standard voltages: 3N-AC 400 V - 50/60 Hz electric models, 1N-AC 230 V - 50/60 Hz gas models
- USB connection
- VCS - Vapor Cleaning System. Innovative automatic cleaning system with controlled dosage.
- Trolley NKS154 - 15 x EN1 (600 x 400)

OPTIONAL TO BE REQUESTED WHEN ORDERING

SSB201: Extra charge for trolley NKS201 - gastronomy version - 20 x GN 1/1 - ↕ 63

MK201B: Marine version. Kit consisting of: immobilizing door lock, flanged feet, display/control panel protection. Extraction hood and configuration for connection, cannot be installed

LLG: Long Life Gasket - Automatic tracked frame hold and release

DSP: Display-control panel protection

SSB564P: Extra charge for trolley NKS564P - 5 x EN1 (600 x 400) - ↕ 250

SN: Extra charge for energy saving system connection. Electric models only

BPK: Configuration for connection to extraction hood

SNCP: Extra charge for energy saving system connection. Electric models only. Exclusive for Power Guardian system

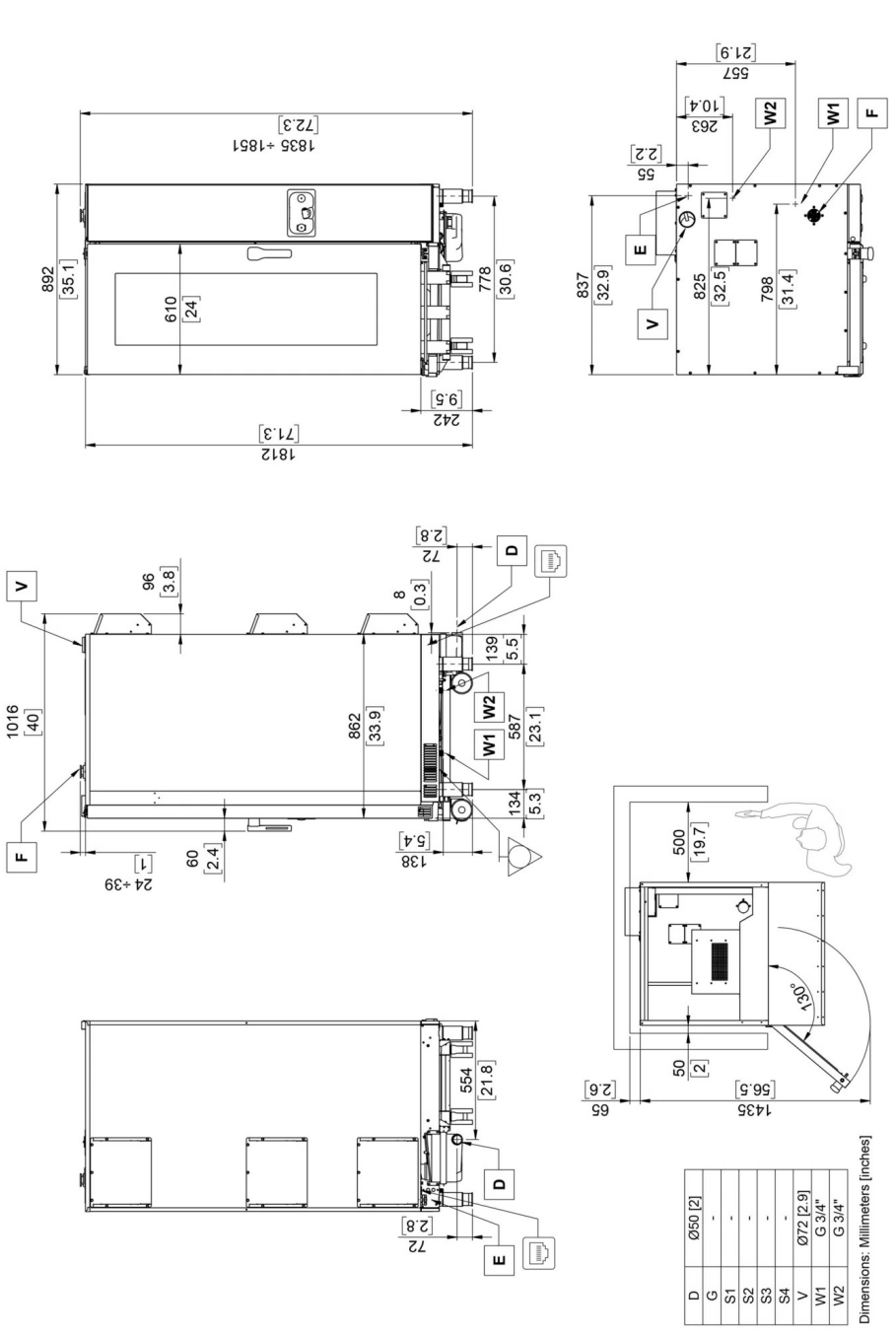

D	Ø50 [2]
G	-
S1	-
S2	-
S3	-
S4	-
V	Ø72 [2.9]
W1	G 3/4"
W2	G 3/4"

Dimensions: Millimeters [inches]

A	Technical compartment cooling air intake	D	Liquid discharge	E	Electric power supply cable inlet	F	Cooking chamber air intake
G	Gas inlet	S1	Cooking chamber fumes exhaust	S2	Cooking chamber fumes exhaust	S3*	Steam generator fumes exhaust
S4*	Steam generator fumes exhaust	V	Steam vent and cooking chamber pressure drop safety device	W1	Water inlet	W2	Softened water inlet
	Equipotential connection		Ethernet connection				

The data reported in this document is to be considered non-binding. The company reserves the right to make changes at any time, without prior notice

LAINOX ALI Group Srl
Via Schiaparelli 15
Z.I. S. Giacomo di Veglia
31029 Vittorio Veneto (TV) · Italy

Tel +39 0438 9110
Fax +39 0438 912300
lainox@lainox.com
www.lainox.com

6/11/2025