ARGN054B

COMBI FOR PASTRY SHOPS AND BAKERIES - 5 X EN1 (600 X 400) - GAS WITH DIRECT STEAM ● TOUCH SCREEN CONTROLS - AUTOMATIC INTERACTIVE COOKING



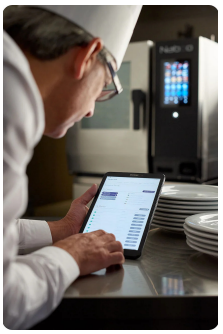

The absolutely unique feature that distinguishes Naboo 5.0 from other professional combi ovens is called Nabook (patented). Thanks to the built-in Wi-Fi connection, you will have access to your virtual kitchen assistant and a myriad of other services (find out more on nabook.cloud).



Features

SMART
Naboo Coach, the virtual assistant which provides advice on cooking, the best washing cycle and lets you know when maintenance is required. The exclusive Naboo 5.0 Autoclima controls the ideal climate, thus guaranteeing excellent cooking quality at all times.

CONNECTED
With built-in WI-FI, Naboo 5.0 is always connected to Nabook Cloud, the comprehensive and free virtual kitchen assistant.

QUICK
Broccoli in just 7 minutes. 24 chickens in 30 minutes (Ref. mod.101)

STURDY
Long Life Component LLC. New long-lasting components. EMA Easy Maintenance Access to reduce service intervention times.

SMALL
Up to 15% less space by miniaturising the components (depending on model).

POWERFUL
Up to 20% more powerful. Pre-heating up to 320°C. Thanks to the new energy supply systems, Naboo 5.0 results in savings of up to 16% less compared to previous models.

EFFICIENT
Energy monitor. VCS Vapor Cleaning System, new washing system. Reduction in detergent consumption up to 30% less.

FLEXIBLE
Multilevel Plus. Configurable controls display. Editable recipes.

Capacity

Capacity		5 x EN1 (600 x 400)		
Distance between layers	*mm*	90	*inch*	3.5
Meals - Croissants	*n.*	60 / 90		
Max. total load	*kg*	30	*lbs*	66.2
Max. tray load	*kg*	15	*lbs*	33.1

Dimensions

Width	*mm*	852	*inch*	33.5
Depth	*mm*	797	*inch*	31.4
Height	*mm*	775	*inch*	30.5
Maximum outer width	*mm*	852	*inch*	33.5
Max exterior depth	*mm*	850	*inch*	33.5
Maximum exterior height	*mm*	820	*inch*	32.3
Packaging width	*mm*	990	*inch*	39.0
Packing depth	*mm*	940	*inch*	37.0
Packaging height	*mm*	980	*inch*	38.6
Net weight	*kg*	115	*lbs*	253.6
Gross weight	*kg*	138	*lbs*	304.3
Volume	*m3*	0.53	*ft3*	18.7
Packing volume	*m3*	0.91	*ft3*	32.1
Minimum installation distance - left side	*mm*	50	*inch*	2.0
Minimum installation distance - rear side	*mm*	50	*inch*	2.0
Minimum installation distance - right side	*mm*	500	*inch*	19.7
Cooking compartment width	*mm*	459	*inch*	18.1
Cooking compartment depth	*mm*	650	*inch*	25.6
Cooking chamber height	*mm*	511	*inch*	20.1

Power supply

Power supply voltage		1N-AC 230 V
Electrical absorption	*A*	3
Frequency	*Hz*	50/60
Total electric power	*kW*	0,7
Differential switch		RCD cl. B
Chamber heating output - G20		13 / 11180

Gas supply

Gas - Type		G20
Min. gas pressure - G20	*bar*	0,018
Max. gas pressure - G20	*bar*	0,025
Gas versions nominal heating output - G20	*kW / kcal*	13 / 11180

Water Connection

Cold water inlet	*ø*	3/4"		
Softened water inlet	*ø*	3/4"		
Min. pressure	*bar*	2		
Max. pressure	*bar*	5		
Minimum water flow	*Lt*	10		
Drainage slope		4°		
Discharge - ø	*mm*	50	*inch*	2.0

Water quality

Water hardness for steam generation connection	*°dh / ppm*	6° / 9° fH		
pH value	*Ph*	> 7,5		
Cl (chloride) - max	*mg / l*	30		
Cl2 (free chlorine)	*mg / l*	0.1		
Fe (iron)	*mg / l*	0.1		
NH2Cl (monochloramine)	*mg / l*	0,2		
Max. cold water temperature	*°C*	30	*°F*	86.00
Max. softened water temperature	*°C*	50	*°F*	122.00
Electrical conductivity	*µS*	50 - 200		

Emissions

Latent heat	*W*	126		
Sensitive heat	*W*	105		
Max. liquid discharge temperature	*°C*	85	*°F*	185.00
Noisiness	*db*	< 50		

HOW TO USE

- ICS (Interactive Cooking System), an automatic cooking system for Italian and international recipes including their history, ingredients, cooking accessory, procedure, automatic cooking programme and a photographic plate presentation.
- Manual mode with three cooking modes and instant cooking start: convection from 30°C to 300°C, steam from 30°C to 130°C, combination convection + steam from 30°C to 300°C.
- Programmable modes: possibility to programme and save a recipe with its cooking methods in an automatic sequence (up to 15 cycles) giving each programme its own name, picture and information on the recipe.
- MULTILEVEL PLUS - The multi-level function on each shelf means doubling production capacity (patented).
- Autoclima® - System that automatically manages the perfect climate in the cooking chamber.
- Fast-Dry Boosted® - Automatic system for quick dehumidification of the cooking chamber.
- MULTILEVEL mode - Possibility to cook different foods simultaneously with different cooking times.
- JUST IN TIME (JIT) mode - Allows different foods to be taken out of the oven at the same time. All with utmost organisation and best results guaranteed, always (patented).
- Pre-heating at 320°C.

CONNECTIVITY

- Nabook - Thanks to the Cloud feature, it is possible to access Nabook, the virtual kitchen assistant (read more on nabook.cloud, free registration).
- Recipe creation including ingredients with procedure and photo.
- Direct access from cooking device to recipe database, with optional download (patented).
- Menu creation with calorie count and list of allergens with layout for customised print out.
- Food cost calculation of recipes and single portion menus.
- Organisation of shopping list to export in Word format.
- Synchronisation of devices connected to the same account (patented).
- Continuous HACCP monitoring even by remote through the Nabook portal.
- Remote diagnosis through the Nabook portal by the LAINOX Service Center.
- Automatic software update notification system.
- Remote consumption monitoring.
- LMS, LAINOX Multidisplay System - Thanks to the Nabook portal and the new LMS, you can configure your devices and synchronise your recipes in a different way for each Naboo.
- Possibility to download recipes from the Nabook portal based on country.
- Possibility to run automatic software updates on multiple devices simultaneously.
- Wi-Fi connection. Compatible with IEEE 802.11g (2.4 GHz) standard.
- Extra charge for Ethernet connection (optional).
- Compatible with temperature monitoring system (e.g. Microlide).

CONTROL MECHANISMS

- Auto reverse (automatic reverse of fan rotation) for perfect cooking uniformity.
- Automatic parallel compartment and core temperature control, DELTA T system.
- Automatically regulated steam condensation.
- Easy access to programmable user parameters to customise the appliance through the user menu.
- Ability to choose up to 6 fan speeds; the first 3 speeds automatically trigger a reduction in heating power. For special cooking methods, you can use an intermittent speed.
- Temperature control at the product core using probe with 4 detection points.
- USB connection to download HACCP data, update software and load/download cooking programmes.
- Possibility of setting combi switch-off at the end of the automatic wash program.
- Pre-configured SN energy optimisation system (optional).
- SERVICE program: Testing the operation of the electronic board - Display of the temperature probes - Counter for operating hours of all primary functions for programmed maintenance.
- Energy Monitor - Monitoring system of energy, gas, water, cleaning chemicals.
- Self-diagnosis before starting to use the equipment, with descriptive and audible signalling of any anomalies.
- EcoVapor - With the EcoVapor system, there is a net reduction in water and energy consumption due to the automatic controls of the steam saturation in the cooking chamber.
- Low consumption LED cooking chamber lighting. Optimal visibility in all points of the cooking chamber. Neutral light that doesn't alter the original colours of the product.
- External Water-softener's efficiency monitoring system (water-softener optional).
- Reminder to clean air filters.
- Possibility to programme staggered cooking times by date and time.
- User profile block (specific function for Quick Service Restaurant - QSR).
- Intelligent Energy System - Based on the quantity and type of product, the oven optimises and controls the energy output, maintaining the best cooking temperature and avoiding fluctuations.
- Core probe connection through a connector outside of the cooking chamber (optional).
- Multipoint core probe fixed, ø 3 mm.
- Multipoint core probe with external connector, ø 3 mm.
- SLCV - Smart Chemicals Control - Precisely controls detergent consumption, alerting you when it is about to run out and suggesting the suitable wash for the amount of residual detergent.
- Green Fine Tuning. Thanks to the burner's proven flame modulation system and high-efficiency heat exchanger, energy wastage is avoided and harmful emissions are therefore reduced.
- Smart Diagnostic System - Functional diagnostics to always have your equipment at its maximum performance.
- SLS - Smart Lighting System - Visual communication that allows you to understand, with just one glance, when work needs to be done (optional).
- Switch mode power supply - New highly efficient switch mode power system.

STRUCTURAL CHARACTERISTICS

- Perfectly smooth, watertight chamber.
- Door with rear ventilated double tempered glass with air chamber and interior heat-reflecting glass for less heat radiation towards the operator and greater efficiency.
- Internal glass that folds to open for easy cleaning.
- Adjustable hinge for optimal seal.
- Deflector that can be opened for easy fan compartment cleaning.
- Cooking chamber in 1 mm thick 18/10 AISI 304 stainless steel with long fully rounded edges for best air flow and easier cleaning.
- New push-in adaptable dove-tail joint seal for oven front panel made with heat and age resistant silicon rubber, easy to replace.
- Built-in door drip tray collecting the condensate into the oven drip tray; then into the oven drain.
- Front removable control panel for easy servicing.
- Two water inlets (soft and cold water).
- New oven drain with built-in air gap in accordance with standard EN61770.
- Compact brushless magnetic drive motors.
- Bottom side plinth with magnetic coupling for easy cleaning and maintenance.
- Forced ventilation electronics cooling system with stainless steel micro-expanded mesh protective filter, easy to remove and dishwasher safe.
- Push-to-close door and handle with right or left opening.
- Long Life Component LLC - Use of new long-lasting components (Lainox internal approval procedure).

OPERATION

- Display that can be configured based on the needs of the user, bringing forward the programmes used most.
- Automatic “One Touch” cooking (ICS).
- Organisation of recipes in folders with preview, giving each folder its own name.
- Intelligent recognition of recipes in multilevel folders.
- 10” colour screen (LCD, high definition, capacitive, with “Touch Screen” functions).
- Instantaneous display in ICS cooking of the HACCP graphic.
- Boosted Pre-heating. Possibility to pre-heat the cooking chamber up to 320°C to reduce cooking times by up to 10% in case of a full oven.
- Cool Down function for the rapid fan-cooling of the cooking chamber.
- Automatic resumption of cooking in case of a power failure.
- Rapid cooling with possible injection of water into the cooking chamber.
- Manual humidifier.
- Acoustic and visual signalling during the various stages of cooking, with a flashing light at the end of the cycle.
- User interface with a choice of 29 languages.
- Possibility to view and modify the recipe at any time.
- Naboo Coach (virtual assistant). Warnings on display indicating need for maintenance.
- 60 recipes available, with hundreds more available by accessing the Nabook portal. Each recipe has been tested to guarantee best results.

GAS OPERATION

- Automatic burner ignition with high-frequency electronic discharge generator.
- Electronic control of the flame with automatic ignition reset.
- Cooking chamber high-performance indirect gas heating system with premixed air-blown modulating flame burners.
- High efficiency heat exchanger with steel expansion cabinet.

STEAM GENERATION - DIRECT

- Direct cooking chamber steam generation system with water injection directly on the fan and nebulization on the heating elements. Advantage: immediate availability of steam in the cooking chamber.

SAFETY FEATURES

- Cooking chamber temperature limiter.
- Cooking compartment safety device for pressure built-up and depression.
- Fan motor thermic protection.
- Door open/closed electronic sensor.
- Electronic control for lack of water alarm.
- Self-diagnosis with smart error viewing.
- Ventilated component cooling system with electronically controlled over-temperature display.
- Electronic flame detection sensor that interrupts the gas flow if the burner flame is accidentally switched off.
- Safety pressure switch for lack of gas alarm.
- Electronically controlled two-stage gas valves.
- Gas shortage-Safety pressure switch.
- Fan motor brake.
- Max 65°C external temperature on the door panel.
- Complies with national and international standards for safe operation in case of use without direct operator supervision - IEC 60335-1 / IEC 60335-2-102 - EN203-1 / EN203-2-2
- Maximum last tray shelf height 160 cm using the model’s specific support.
- In case of a power failure during washing, hygiene is always guaranteed insofar as the washing cycle is automatically resumed.

CLEANING AND MAINTENANCE

- Manual cleaning system with retractable hand-held shower.
- WMS - Wash Management System. System allowing washing programmes to be planned based on combi use.
- EMA - Easy Maintenance Access. Easy access for maintenance of the appliance from the bottom front part and right-hand side.
- 7 automatic washing programmes without the need for operator input after start-up: Manual - Rinse - Fast - Soft - Medium Eco - Hard Eco - Grill.
- "Fast" ultra-fast washing in 10’. Minimum interruptions to the work cycle and consistently optimal cleaning.
- Easy external cleaning thanks to perfectly smooth surfaces in stainless steel and glass and IPX5 protection against water splashes.
- VCS - Vapor Cleaning System. Innovative automatic cleaning system with controlled dosage. The vaporisation of the detergent in the cooking chamber enables a considerable reduction in detergent consumption of up to 30%.
- CombiClean Boosted liquid cleaner in 5 L cartridge (100% recyclable HDPE). Supplied with cartridge of CombiBlue (990 g), alkaline cleaning agent for initial oven start-up.

INSTALLATION AND ENVIRONMENT

- 100% recyclable packaging.
- LCP - Life cycle perspective: CO2 consumption - 380 Kg CO2 eq/year. The calculation was performed taking mod. _E101B (model with steam generator), taking into account a hypothetical restaurant use and considering 8 hours a day for 3.5 days a week, forty-eight day per year.
- Product recycling rate: 90%.
- Quality ISO 9001 / Safety ISO 45001 / Environmental ISO 14001 certification.
- It is recommended to have the equipment installed by LAINOX accredited Service Centers.
- Operation without adding the water softener and descaler (model with steam generator).
- It is recommended to have periodic maintenance carried out by a LAINOX Service Center in accordance with the manufacturer's recommendations and as stated in the maintenance manual and warranty.

STANDARD EQUIPMENT

- Built-in and retractable hand shower with tap
- Multipoint core probe ø 3 mm. Fixed probe
- Electrical cable - length 3 m. Only for standard voltages: 3N-AC 400 V - 50/60 Hz electric models, 1N-AC 230 V - 50/60 Hz gas models
- Wi-Fi connection. Compatible with IEEE 802.11g (2.4GHz) standard
- USB connection
- VCS - Vapor Cleaning System. Innovative automatic cleaning system with controlled dosage.

OPTIONAL TO BE REQUESTED WHEN ORDERING

SPP611F: Extra charge for shelf racks - GN 1/1 - EN1 (600 X 400) - BGP611F
OCBM1: Isolation transformer for two-phase/single phase connection for gas models 2AC 220-240V/1N AC 230V
BLK06: Black Edition - black RAL 9005
SSB564: Extra charge for removable rack SBE564 - 5 x EN1 (600 x 400) - ↕ 80 mm + compulsory frame BTL011
SSB061: Extra charge for removable rack SBE061 - 6 x GN 1/1 - ↕ 63 mm + compulsory frame BTL011
SPP611: Extra charge for shelf racks BGP611 - 6 x GN 1/1 - ↕ 70 mm
SLCV: Smart chemical control - For direct steam models
KSCBO: Pre-configuration for quick connection for core probe via external connector. Multipoint core probe ø 3 mm included
DSP: Display-control panel protection
NPSB: Right hinged door, equipped with multipoint core probe with external connector, ø 3 mm
APDS: Double release door opening
NETH: Extra charge for Ethernet connection
SLS1: Smart lighting system - Chromatic communication

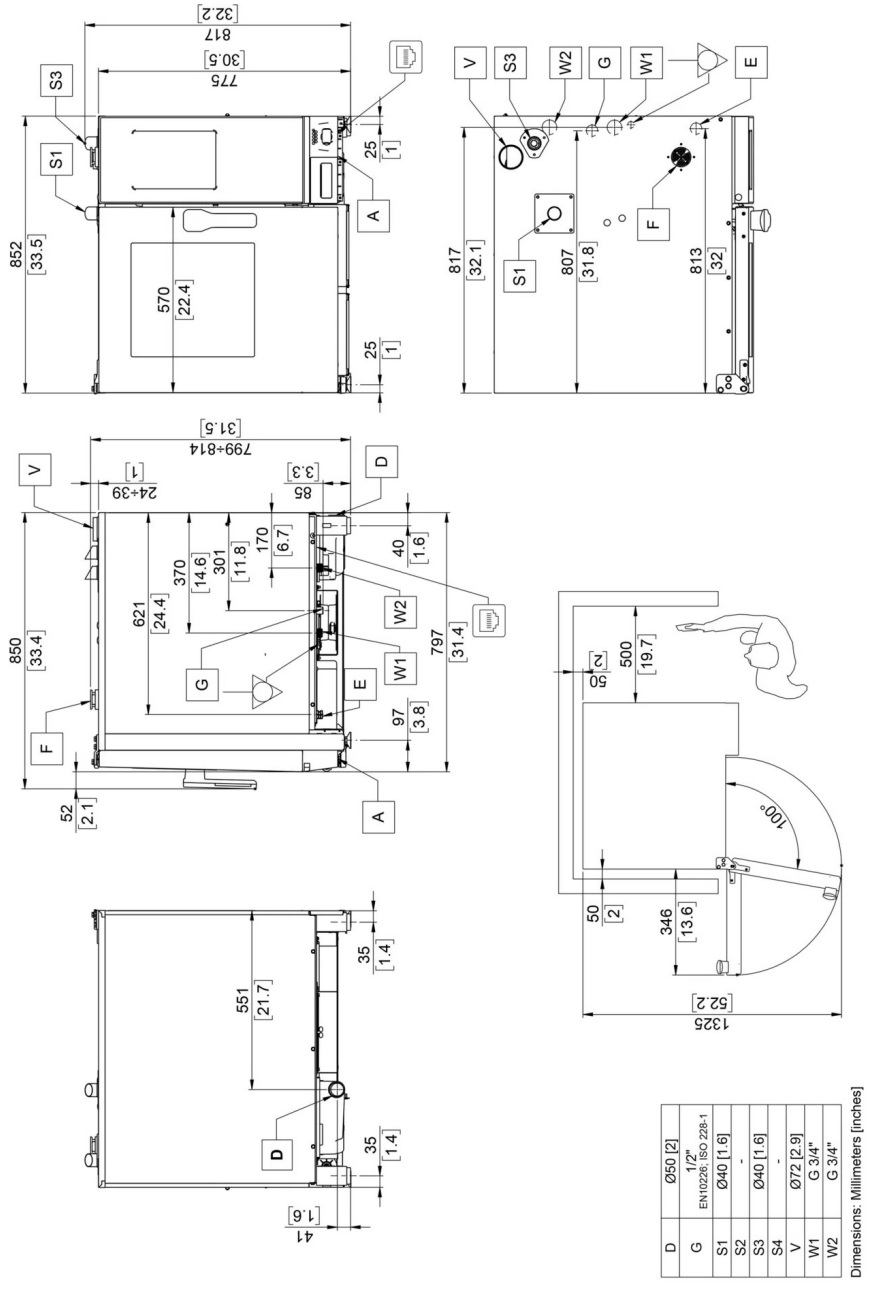

D	
G	Ø50 [2] 1/2" EN10226; ISO 228-1
S1	Ø40 [1.6]
S2	-
S3	Ø40 [1.6]
S4	-
V	Ø72 [2.9]
W1	G 3/4"
W2	G 3/4"

Dimensions: Millimeters [inches]

A	Technical compartment cooling air intake	D	Liquid discharge	E	Electric power supply cable inlet	F	Cooking chamber air intake
G	Gas inlet	S1	Cooking chamber fumes exhaust	S2	Cooking chamber fumes exhaust	S3*	Steam generator fumes exhaust
S4*	Steam generator fumes exhaust	V	Steam vent and cooking chamber pressure drop safety device	W1	Water inlet	W2	Softened water inlet
	Equipotential connection		Ethernet connection				

The data reported in this document is to be considered non-binding. The company reserves the right to make changes at any time, without prior notice
According to CE rules, gas ovens must be installed where proper evacuation of burnt gas can be provided (type B13, B23, A3)

LAINOX

LAINOX ALI Group Srl
Via Schiaparelli 15
Z.I. S. Giacomo di Veglia
31029 Vittorio Veneto (TV) · Italy

Tel +39 0438 9110
Fax +39 0438 912300
lainox@lainox.com
www.lainox.com

6/11/2025