Naboo 5.0

LAINOX

NAE062B

COMBI FOR CATERING AND LARGE BUSINESSES - 6 X 2/1 GN, 12 X 1/1 GN - ELECTRIC WITH DIRECT STEAM - STEAM GENERATOR OPTIONAL ● TOUCH SCREEN CONTROLS - AUTOMATIC INTERACTIVE COOKING

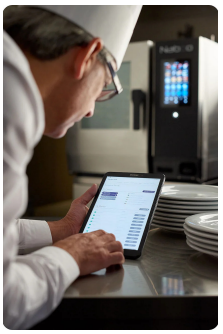

The absolutely unique feature that distinguishes Naboo 5.0 from other professional combi ovens is called Nabook (patented). Thanks to the built-in Wi-Fi connection, you will have access to your virtual kitchen assistant and a myriad of other services (find out more on nabook.cloud).

Features

SMART
Naboo Coach, the virtual assistant which provides advice on cooking, the best washing cycle and lets you know when maintenance is required. The exclusive Naboo 5.0 Autoclima controls the ideal climate, thus guaranteeing excellent cooking quality at all times.

CONNECTED
With built-in WI-FI, Naboo 5.0 is always connected to Nabook Cloud, the comprehensive and free virtual kitchen assistant.

QUICK
Broccoli in just 7 minutes. 24 chickens in 30 minutes (Ref. mod.101)

STURDY
Long Life Component LLC. New long-lasting components. EMA Easy Maintenance Access to reduce service intervention times.

SMALL
Up to 15% less space by miniaturising the components (depending on model).

POWERFUL
Up to 20% more powerful. Pre-heating up to 320°C. Thanks to the new energy supply systems, Naboo 5.0 results in savings of up to 16% less compared to previous models.

EFFICIENT
Energy monitor. VCS Vapor Cleaning System, new washing system. Reduction in detergent consumption up to 30% less.

FLEXIBLE
Multilevel Plus. Configurable controls display. Editable recipes.

CE EMC CB IPX5 EAC UK CA

Capacity

Capacity		6 x GN 2/1 - 12 x GN 1/1		
Distance between layers	mm	70	inch	2.8
Meals - Croissants	n.	60 / 160 - 108 / 180		
Max. total load	kg	60	lbs	132.3
Max. tray load	kg	25	lbs	55.1

Dimensions

Width	mm	1072	inch	42.2
Depth	mm	907	inch	35.7
Height	mm	775	inch	30.5
Maximum outer width	mm	1072	inch	42.2
Max exterior depth	mm	960	inch	37.8
Maximum exterior height	mm	820	inch	32.3
Packaging width	mm	1210	inch	47.6
Packing depth	mm	1050	inch	41.3
Packaging height	mm	980	inch	38.6
Net weight	kg	138	lbs	304.3
Gross weight	kg	162	lbs	357.2
Net weight (with steam generator)	kg	145	lbs	319.7
Gross weight (with steam generator)	kg	170	lbs	374.9
Volume	m3	0.75	ft3	26.5
Packing volume	m3	1.25	ft3	44.1
Minimum installation distance - left side	mm	50	inch	2.0
Minimum installation distance - rear side	mm	50	inch	2.0
Minimum installation distance - right side	mm	500	inch	19.7
Cooking compartment width	mm	654	inch	25.7
Cooking compartment depth	mm	760	inch	29.9
Cooking chamber height	mm	530	inch	20.9

Power supply

Power supply voltage		3N-AC 400 V
Electrical absorption	A	34
Frequency	Hz	50/60
Total electric power	kW	22,2
Differential switch		RCD cl. B
Steam heating power (with steam generator)	kW / kcal	18 / -

Water Connection

Cold water inlet	ø	3/4"		
Softened water inlet	ø	3/4"		
Min. pressure	bar	2		
Max. pressure	bar	5		
Minimum water flow	Lt	10		
Drainage slope		4°		
Discharge - ø	mm	50	inch	2.0

Water quality

Water hardness for steam generation connection	°dh / ppm	6° / 9° fH		
pH value	Ph	> 7,5		
Cl (chloride) - max	mg / l	30		
Cl2 (free chlorine)	mg / l	0,1		
Fe (iron)	mg / l	0,1		
NH2Cl (monochloramine)	mg / l	0,2		
Max. cold water temperature	°C	30	°F	86.00
Max. softened water temperature	°C	50	°F	122.00
Electrical conductivity	µS	50 - 200		

Emissions

Latent heat	W	3996		
Sensitive heat	W	2664		
Max. liquid discharge temperature	°C	85	°F	185.00
Noisiness	db	< 50		

Special voltages and frequencies on request

TS-NAE062B-F60	3-AC 480 V - 60 Hz
TS-NAE062B-F50	3-AC 480 V - 50 Hz
TS-NAE062B-E60	3N-AC 440 V - 60 Hz
TS-NAE062B-E50	3N-AC 440 V - 50 Hz
TS-NAE062B-D60	3-AC 440 V - 60 Hz
TS-NAE062B-D50	3-AC 440 V - 50 Hz
TS-NAE062B-C60	3-AC 400 V - 60 Hz
TS-NAE062B-C50	3-AC 400 V - 50 Hz
TS-NAE062B-B60	3-AC 230 V - 60 Hz
TS-NAE062B-B50	3-AC 230 V - 50 Hz

HOW TO USE

- ICS (Interactive Cooking System), an automatic cooking system for Italian and international recipes including their history, ingredients, cooking accessory, procedure, automatic cooking programme and a photographic plate presentation.
- Manual mode with three cooking modes and instant cooking start: convection from 30°C to 300°C, steam from 30°C to 130°C, combination convection + steam from 30°C to 300°C.
- Programmable modes: possibility to programme and save a recipe with its cooking methods in an automatic sequence (up to 15 cycles) giving each programme its own name, picture and information on the recipe.
- MULTILEVEL PLUS - The multi-level function on each shelf means doubling production capacity (patented).
- Autoclima® - System that automatically manages the perfect climate in the cooking chamber.
- Fast-Dry Boosted® - Automatic system for quick dehumidification of the cooking chamber.
- Innovative SmokeGrill for barbecue system (patented). Recyclable SmokeEssence dispenser in soft material, with dedicated housing and front loading (optional).
- MULTILEVEL mode - Possibility to cook different foods simultaneously with different cooking times.
- JUST IN TIME (JIT) mode - Allows different foods to be taken out of the oven at the same time. All with utmost organisation and best results guaranteed, always (patented).
- Night cooking. Low temperature night cooking and subsequent holding guarantees perfect maturation of the meat with minimum weight loss and low power consumption.
- Pre-heating at 320°C.

CONNECTIVITY

- Nabook - Thanks to the Cloud feature, it is possible to access Nabook, the virtual kitchen assistant (read more on nabook.cloud, free registration).
- Recipe creation including ingredients with procedure and photo.
- Direct access from cooking device to recipe database, with optional download (patented).
- Menu creation with calorie count and list of allergens with layout for customised print out.
- Food cost calculation of recipes and single portion menus.
- Organisation of shopping list to export in Word format.
- Synchronisation of devices connected to the same account (patented).
- Continuous HACCP monitoring even by remote through the Nabook portal.
- Remote diagnosis through the Nabook portal by the LAINOX Service Center.
- Automatic software update notification system.
- Remote consumption monitoring.
- LMS, LAINOX Multidisplay System - Thanks to the Nabook portal and the new LMS, you can configure your devices and synchronise your recipes in a different way for each Naboo.
- Possibility to download recipes from the Nabook portal based on country.
- Possibility to run automatic software updates on multiple devices simultaneously.
- Wi-Fi connection. Compatible with IEEE 802.11g (2.4 GHz) standard.
- Extra charge for Ethernet connection (optional).
- Compatible with temperature monitoring system (e.g. Microlide).

CONTROL MECHANISMS

- Auto reverse (automatic reverse of fan rotation) for perfect cooking uniformity.
- Automatic parallel compartment and core temperature control, DELTA T system.
- Automatically regulated steam condensation.
- Easy access to programmable user parameters to customise the appliance through the user menu.
- Ability to choose up to 6 fan speeds; the first 3 speeds automatically trigger a reduction in heating power. For special cooking methods, you can use an intermittent speed.
- Temperature control at the product core using probe with 4 detection points.
- 2 core probe (optional).
- USB connection to download HACCP data, update software and load/download cooking programmes.
- Possibility of setting combi switch-off at the end of the automatic wash program.
- Pre-configured SN energy optimisation system (optional).
- SERVICE program: Testing the operation of the electronic board - Display of the temperature probes - Counter for operating hours of all primary functions for programmed maintenance.
- Energy Monitor - Monitoring system of energy, gas, water, cleaning chemicals.
- Self-diagnosis before starting to use the equipment, with descriptive and audible signalling of any anomalies.
- EcoVapor - With the EcoVapor system, there is a net reduction in water and energy consumption due to the automatic controls of the steam saturation in the cooking chamber.
- Low consumption LED cooking chamber lighting. Optimal visibility in all points of the cooking chamber. Neutral light that doesn't alter the original colours of the product.
- External Water-softener's efficiency monitoring system (water-softener optional).
- Reminder to clean air filters.
- Possibility to programme staggered cooking times by date and time.
- User profile block (specific function for Quick Service Restaurant - QSR).
- Intelligent Energy System - Based on the quantity and type of product, the oven optimises and controls the energy output, maintaining the best cooking temperature and avoiding fluctuations.
- TurboVapor - With the TurboVapor system the ideal level of steam is automatically produced to cook "tough" products like egg pasta or asparagus, turnip greens and chard, which are notoriously fibrous vegetables (for model with steam generator).
- Core probe connection through a connector outside of the cooking chamber (optional).
- Multipoint core probe fixed, ø 3 mm.
- SLCV / SLCS - Smart Chemicals Control - Precisely controls detergent consumption by alerting you when it is about to run out and suggesting the appropriate wash for the amount of detergent remaining.
- Smart Diagnostic System - Functional diagnostics to always have your equipment at its maximum performance.
- SLS - Smart Lighting System - Visual communication that allows you to understand, with just one glance, when work needs to be done (optional).
- Switch mode power supply - New highly efficient switch mode power system.

STRUCTURAL CHARACTERISTICS

- Perfectly smooth, watertight chamber.
- Door with rear ventilated double tempered glass with air chamber and interior heat-reflecting glass for less heat radiation towards the operator and greater efficiency.
- Internal glass that folds to open for easy cleaning.
- Adjustable hinge for optimal seal.
- Deflector that can be opened for easy fan compartment cleaning.
- Cooking chamber in 1 mm thick 18/10 AISI 304 stainless steel with long fully rounded edges for best air flow and easier cleaning.
- New push-in adaptable dove-tail joint seal for oven front panel made with heat and age resistant silicon rubber, easy to replace.
- Built-in door drip tray collecting the condensate into the oven drip tray; then into the oven drain.
- Front removable control panel for easy servicing.
- Two water inlets (soft and cold water).
- New oven drain with built-in air gap in accordance with standard EN61770.
- Compact brushless magnetic drive motors.
- Solid state relay for power optimisation and modulation.
- Bottom side plinth with magnetic coupling for easy cleaning and maintenance.
- Forced ventilation electronics cooling system with stainless steel micro-expanded mesh protective filter, easy to remove and dishwasher safe.
- Push-to-close door and handle with right or left opening.
- Long Life Component LLC - Use of new long-lasting components (Lainox internal approval procedure).

OPERATION

- Display that can be configured based on the needs of the user, bringing forward the programmes used most.
- Automatic “One Touch” cooking (ICS).
- Organisation of recipes in folders with preview, giving each folder its own name.
- Intelligent recognition of recipes in multilevel folders.
- 10” colour screen (LCD, high definition, capacitive, with “Touch Screen” functions).
- Instantaneous display in ICS cooking of the HACCP graphic.
- Boosted Pre-heating. Possibility to pre-heat the cooking chamber up to 320°C to reduce cooking times by up to 10% in case of a full oven.
- Cool Down function for the rapid fan-cooling of the cooking chamber.
- Automatic resumption of cooking in case of a power failure.
- Rapid cooling with possible injection of water into the cooking chamber.
- Manual humidifier.
- Acoustic and visual signalling during the various stages of cooking, with a flashing light at the end of the cycle.
- User interface with a choice of 29 languages.
- 227 recipes available, with hundreds more available by accessing the Nabook portal. Each recipe has been tested to guarantee best results.
- Possibility to view and modify the recipe at any time.
- Naboo Coach (virtual assistant). Warnings on display indicating need for maintenance.

ELECTRICAL OPERATION

- Cooking chamber heating system with armoured heating elements in INCOLOY 800 stainless steel.

STEAM GENERATION - DIRECT

- Direct cooking chamber steam generation system with water injection directly on the fan and nebulization on the heating elements. Advantage: immediate availability of steam in the cooking chamber.

STEAM GENERATION - INDIRECT (WITH STEAM GENERATOR)

- Steam generator heating elements of armoured INCOLOY 800 type.
- Automatic boiler pre-heating.
- Daily automatic boiler draining and rinsing, temperature of drained water below 60°C.
- Alarm in case of boiler de-scaling required.
- Boiler semi-automatic de-scaling program.
- CAL-OUT system to prevent scale build-up within the boiler, as standard.
- New high-performance fully insulated steam generator in AISI 304 stainless steel.

SAFETY FEATURES

- Cooking chamber temperature limiter.
- Cooking compartment safety device for pressure built-up and depression.
- Fan motor thermic protection.
- Door open/closed electronic sensor.
- Electronic control for lack of water alarm.
- Self-diagnosis with smart error viewing.
- Ventilated component cooling system with electronically controlled over-temperature display.
- Steam generator temperature limiter.
- Automatic electronic control of water level in the steam generator during filling and draining.
- Boiler probe to check boiler completely empty.
- Fan motor brake.
- Max 65°C external temperature on the door panel.
- Complies with national and international standards for safe operation in case of use without direct operator supervision - IEC 60335-1 / IEC 60335-2-42.
- Maximum last tray shelf height 160 cm using the model’s specific support.
- In case of a power failure during washing, hygiene is always guaranteed insofar as the washing cycle is automatically resumed.

CLEANING AND MAINTENANCE

- Manual cleaning system with retractable hand-held shower.
- WMS - Wash Management System. System allowing washing programmes to be planned based on combi use.
- EMA - Easy Maintenance Access. Easy access for maintenance of the appliance from the bottom front part and right-hand side.
- 7 automatic washing programmes without the need for operator input after start-up: Manual - Rinse - Fast - Soft - Medium Eco - Hard Eco - Grill.
- "Fast" ultra-fast washing in 10’. Minimum interruptions to the work cycle and consistently optimal cleaning.
- Easy external cleaning thanks to perfectly smooth surfaces in stainless steel and glass and IPX5 protection against water splashes.
- VCS - Vapor Cleaning System. Innovative automatic cleaning system with controlled dosage. The vaporisation of the detergent in the cooking chamber enables a considerable reduction in detergent consumption of up to 30%.
- CombiClean Boosted liquid cleaner in 5 L cartridge (100% recyclable HDPE). Supplied with cartridge of CombiBlue (990 g), alkaline cleaning agent for initial oven start-up.
- CALOUT descaling system that prevents the formation and accumulation of limescale in the steam generator (for model with steam generator). Internal housing for descaler cartridge with automatic dispensing (CalFree Boosted liquid descaler, in 100% recyclable cartridges. Supplied with 1 cartridge of liquid descaler - 990 gr.
- CalFree Boosted liquid limescale remover in 5 L cartridge (100% recyclable HDPE). Supplied in 990 g cartridge.

INSTALLATION AND ENVIRONMENT

- 100% recyclable packaging.
- LCP - Life cycle perspective: CO2 consumption - 380 Kg CO2 eq/year. The calculation was performed taking mod. _E101B (model with steam generator), taking into account a hypothetical restaurant use and considering 8 hours a day for 3.5 days a week, forty-eight day per year.
- Product recycling rate: 90%.
- Quality ISO 9001 / Safety ISO 45001 / Environmental ISO 14001 certification.
- It is recommended to have the equipment installed by LAINOX accredited Service Centers.
- Operation without adding the water softener and descaler (model with steam generator).
- It is recommended to have periodic maintenance carried out by a LAINOX Service Center in accordance with the manufacturer's recommendations and as stated in the maintenance manual and warranty.

STANDARD EQUIPMENT

- Built-in and retractable hand shower with tap
- CALOUT descaling system for models with boiler. Supplied with anti-scale product
- Multipoint core probe ø 3 mm. Fixed probe
- Electrical cable - length 3 m. Only for standard voltages: 3N-AC 400 V - 50/60 Hz electric models, 1N-AC 230 V - 50/60 Hz gas models
- Wi-Fi connection. Compatible with IEEE 802.11g (2.4GHz) standard
- USB connection
- VCS - Vapor Cleaning System. Innovative automatic cleaning system with controlled dosage.

OPTIONAL TO BE REQUESTED WHEN ORDERING

OB062E: Steam generator. For electric model
KPG210S: Chicken grill kit professional - For stacking kit (102 + 062)
SSB062: Extra charge for removable rack SBE062 - 6 x GN 2/1 - 12 x GN 1/1 - ↕ 61 mm + compulsory frame BTL021
SPP621: Extra charge for shelf racks - BGP621 - 6 x GN 2/1 - 12 x GN 1/1 - ↕ 70 mm
SLCV: Smart chemical control - For direct steam models
SLCS: Smart chemical control - For steam generator models
NSGB: Innovative smokegrill for barbecue system
MK062B: Marine version. Kit consisting of: immobilizing door lock, anti slipping rack rails, flanged feet, display/control panel protection. Extraction hood and configuration for connection, cannot be installed
KSCBO: Pre-configuration for quick connection for core probe via external connector. Multipoint core probe ø 3 mm included
KPG021: Chicken grill kit professional
DSP: Display-control panel protection
SSP062: Extra charge for removable plate racks BPP062 - n. 30 plates Ø 310 - ↕ 65 mm + compulsory frame BTL021
KPG021S: Chicken grill kit professional - For stacking kit (062 + 062)
NPSB: Right hinged door, equipped with multipoint core probe with external connector, ø 3 mm
APDS: Double release door opening
SN: Extra charge for energy saving system connection. Electric models only
NETH: Extra charge for Ethernet connection
BPK: Configuration for connection to extraction hood
SLS1: Smart lighting system - Chromatic communication
SNCP: Extra charge for energy saving system connection. Electric models only. Exclusive for Power Guardian system

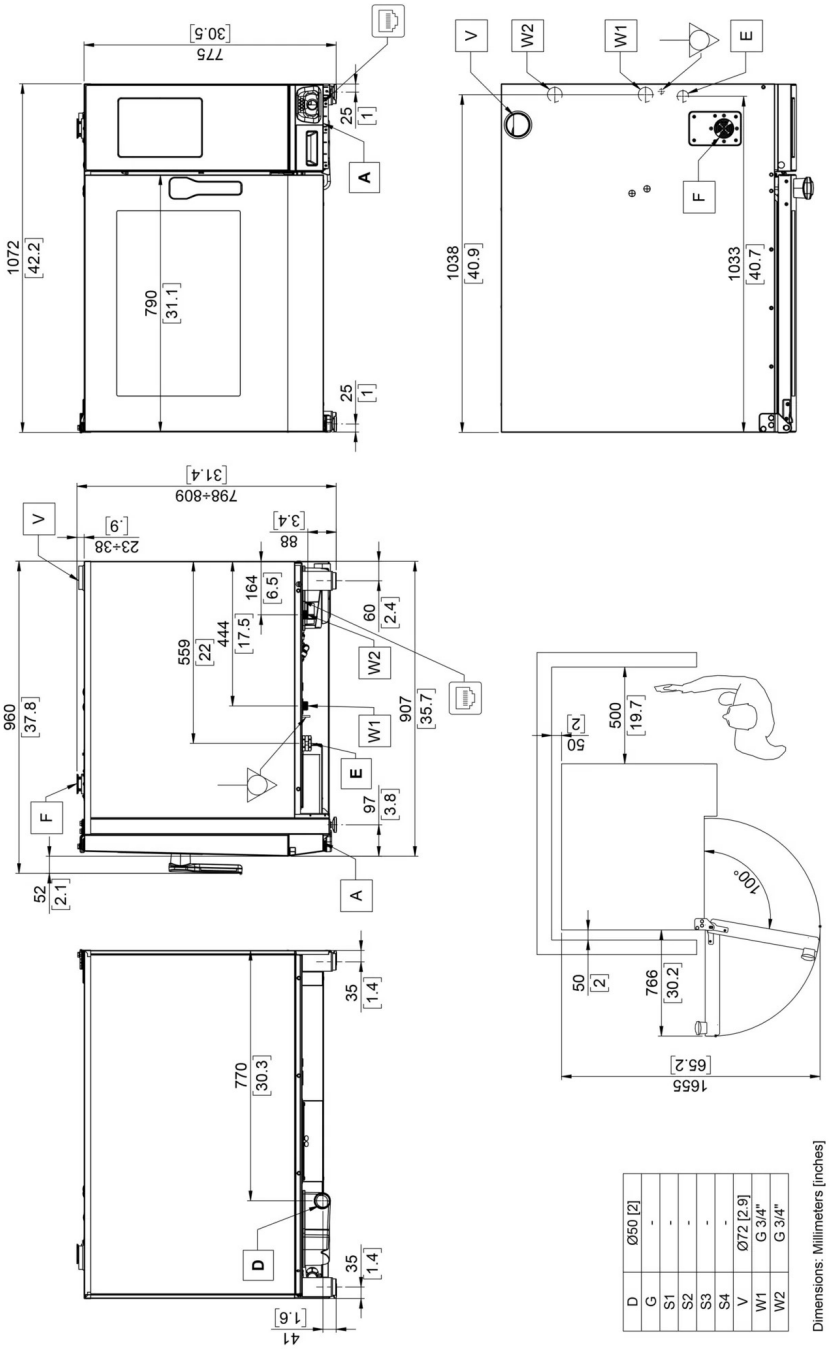

D	Ø50 [2]
G	-
S1	-
S2	-
S3	-
S4	-
V	Ø72 [2.9]
W1	G 3/4"
W2	G 3/4"

Dimensions: Millimeters [inches]

A	Technical compartment cooling air intake	D	Liquid discharge	E	Electric power supply cable inlet	F	Cooking chamber air intake
G	Gas inlet	S1	Cooking chamber fumes exhaust	S2	Cooking chamber fumes exhaust	S3*	Steam generator fumes exhaust
S4*	Steam generator fumes exhaust	V	Steam vent and cooking chamber pressure drop safety device	W1	Water inlet	W2	Softened water inlet
	Equipotential connection		Ethernet connection				

The data reported in this document is to be considered non-binding. The company reserves the right to make changes at any time, without prior notice

LAINOX

LAINOX ALI Group Srl
Via Schiaparelli 15
Z.I. S. Giacomo di Veglia
31029 Vittorio Veneto (TV) · Italy

Tel +39 0438 9110
Fax +39 0438 912300
lainox@lainox.com
www.lainox.com